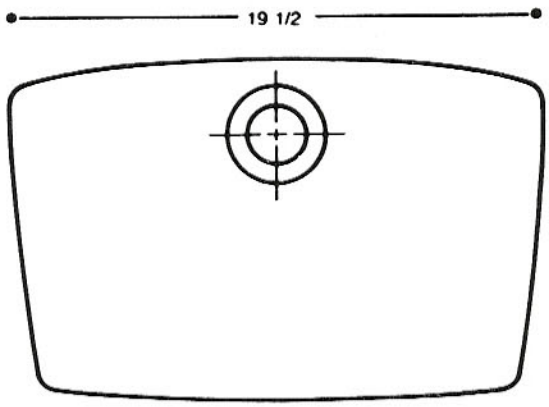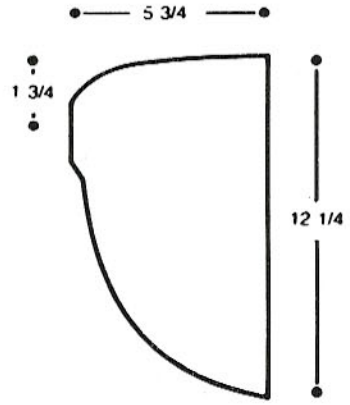ASHCRAFT
GRANITE & MARBLE