ASHCRAFT
GRANITE & MARBLE

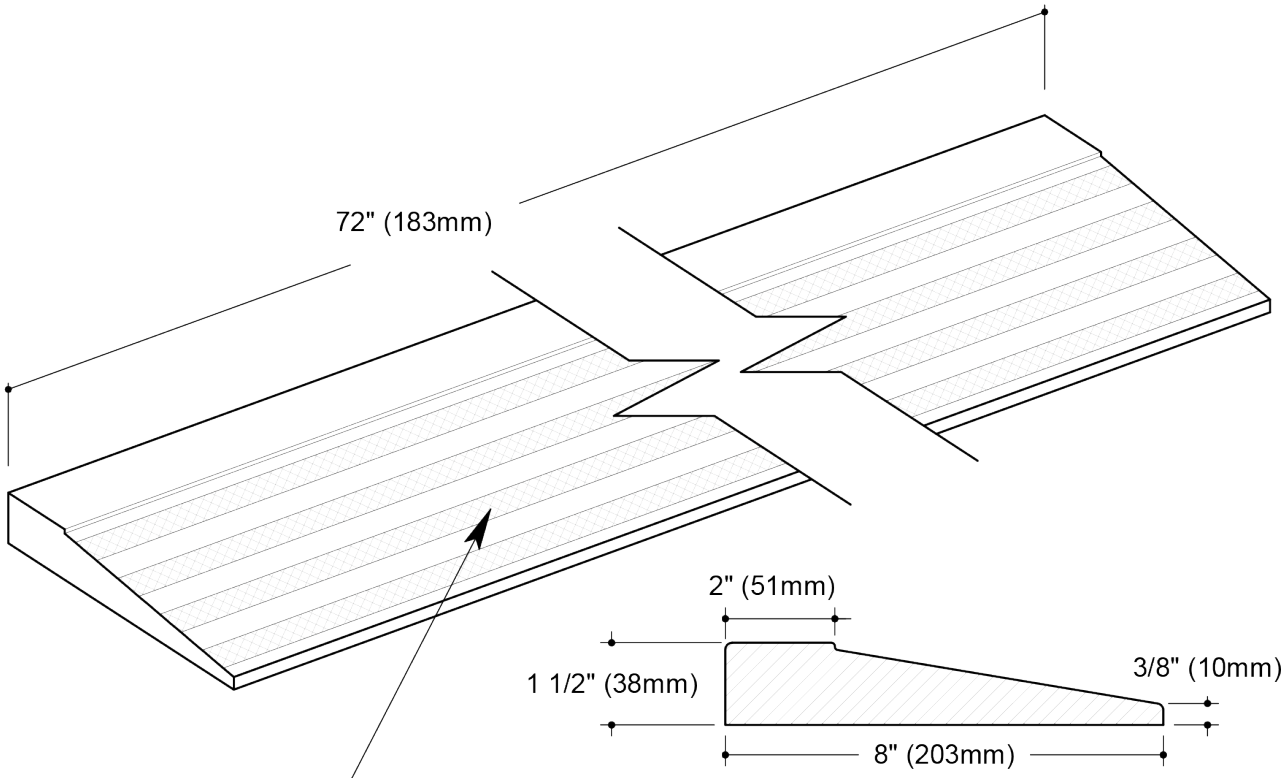

TEXTURED SURFACE